HSF RoHS

FILE NO :E362810

SPECIFICATIONS
Rated Current:3.0AMP
Contact Resistance:20mΩ Max
Withstand Voltage:1000V AC/DC
Insulation Resistance:1000MΩ Min
Operation Temperature:-40°c to +105°c

Contact Material:Brass
Contact Plating:Au or Sn Over Ni
Insulator Material:Polyester(UL94V-0)
Standard: PBT
Max.Processing Temp: 180°C for 30-60 seconds
(200°C for 10 seconds)

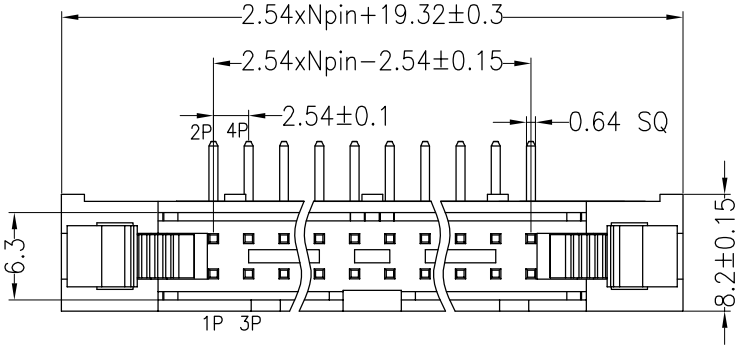

Recommended P.C.B Layout(Top Side)
(PCB BOARD TOLERANCE±0.05)

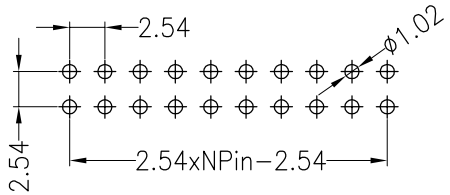

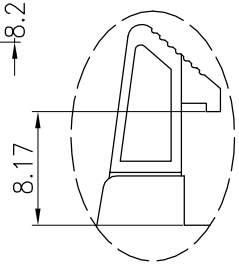

Long Latch

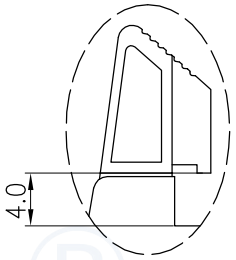

Short Latch

Ordering Information

3310 XX R XX X X X X 0X

- No.of Pins Per Row: 6--64
- Contact Plating: G0:Gold Flash; G1:1U" Gold; G2:1.5U" Gold; G3:2U" Gold; G4:3U" Gold; G5:5U" Gold; S0:Gold Flash/Tin; SN:Tin
- Insulator Material Option: A=PBT; C=PA6T; D=PA46; F=PA9T; F=LCP
- Color Type: B=Black; G=Grey
- Latch Type: L=Long Latch; S=Short Latch; N=Without Latch
- Packing: 0=PE Bag; A=Tray; T=Tube

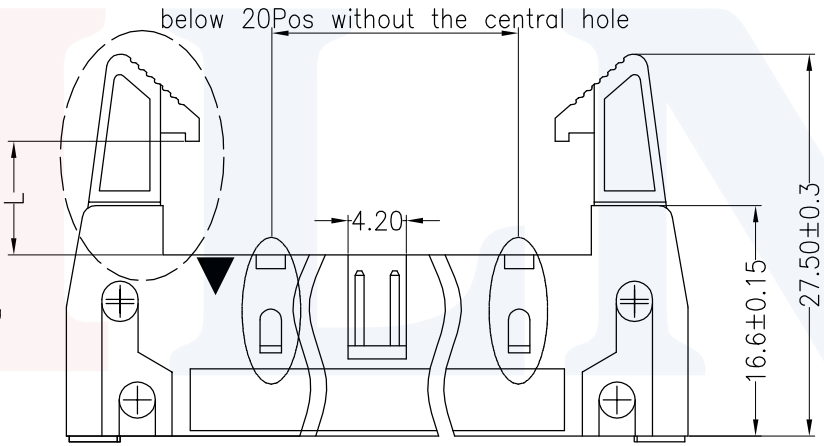

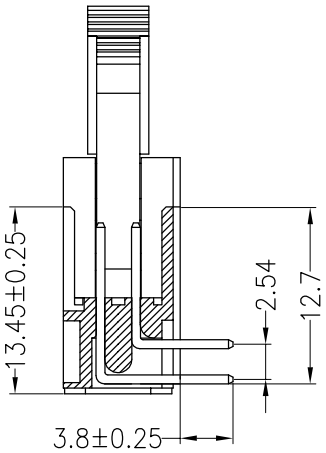

REV	DATE	MODIFICATION DESCRIPTION	CHANGE
A0	2020.03.28	NEW DRAWING	

OPERATION	
X.X	±0.30
X.XX	±0.20
X.XXX	±0.10
Angle	±3°
DIM	TOL

DRAW	YiYuSheng	20.03.28	SCALE	FIT
			UNIT	mm
CHECK			SIZE	A4
			SHEET	1/1
APPROVE			PROJ.	

JILN® 深圳市锦凌电子有限公司
SHENZHEN JINLING ELECTRONIC CO.,LTD
Tel: 86-755-2997-5806/5802 Fax: 86-755-2997-5992

PART NO.	3310XXRXXXXXX0X
TITLE:	2.54 ejector header Npin 90°