HSF RoHS

SPECIFICATIONS

Housing: Thermoplastic,UL94V-0
Color: Black
Contact:Copper Alloy
Shell:Zinc Alloy
Voltage Current Rating:1.0AMP.250V AC
Insulation Resistance:500MΩ Min.
Contact Resistance:30mΩ Max.
Dielectric Withstanding Voltage:500V AC
Temperature Range:-40° C to +105° C

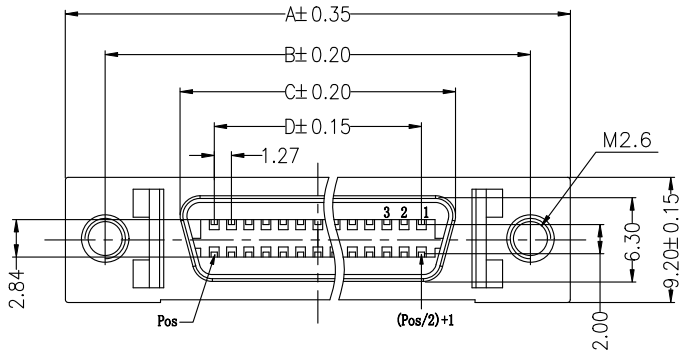

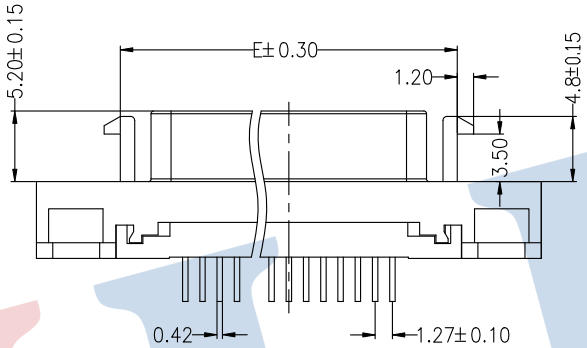

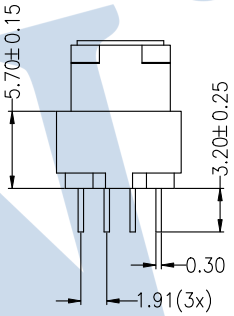

No. of Pin	DIME NSIONS				
	A	B	C	D	E
14	29.51	23.64	12.60	7.62	17.25
20	33.32	27.45	16.43	11.43	21.06
26	37.13	31.26	20.24	15.24	24.76
36	43.48	37.61	26.50	21.59	31.11
50	52.37	46.50	35.39	30.48	40.00
68	64.00	57.92	46.90	41.91	51.00
100	84.18	78.23	67.14	62.23	71.50

Ordering Information

6300 F XXX S C XX M N T 0X

- XXX: No.of Pins 14,20P,26P,36P 50P,68P,100P
- S: Connector Type S=Straight
- XX: Contact Plating G0:Gold Flash S0:Gold Flash/Tin S1:3U" Gold /Tin S2:5U" Gold /Tin S3:10U" Gold /Tin S4:15U" Gold /Tin S5:30U" Gold /Tin
- 0X: Stream code

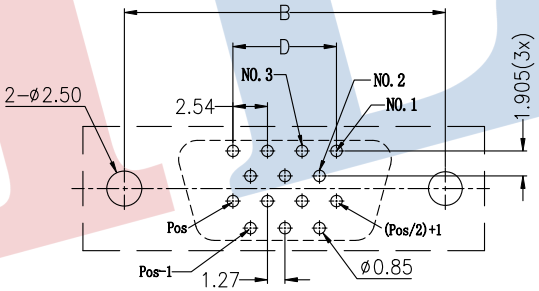

PCB Layout
(14,26,50 Pos)

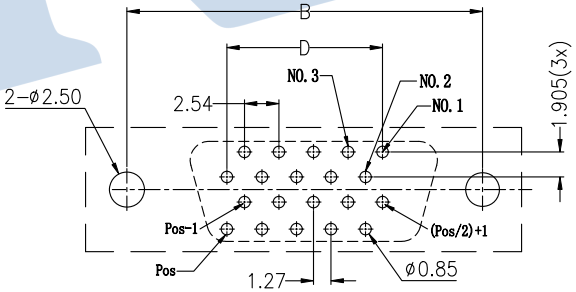

PCB Layout
(20,36,68,100 Pos)

REV	DATE	MODIFICATION DESCRIPTION	CHANGE
A0	2020.05.05	NEW DRAWING	

OPERATION				
DIM	TOL	DRAW	yiyusheng	20.05.05
X.X	±0.30	CHECK		
X.XX	±0.20			
X.XXX	±0.10			
Angle	±3°	APPROVE		

SCALE	FIT
UNIT	mm
SIZE	A4
SHEET	1/1
PROJ.	

JILN® 深圳市锦凌电子有限公司
SHENZHEN JINLING ELECTRONICS CO.,LTD
Tel: 86-755-27483253 Fax: 86-755-2997-5588

PART NO.	6300FXXXSCXXMNT0X
TITLE:	SCSI Connector Female 180°