HSF RoHS

SPECIFICATIONS
PERFORMANCE
Rated Current:3.0AMP
Contact Resistance:20mΩ Max
Insulation Resistance:1000MΩ Min
Withstand Volt:500V AC/minute
Opratng Temperature:−40°C to +105°C

Material
Contact terminal:Brass
Contact Plating:Au or Sn Over Ni
Housing:PA6T UL94V−0
Max.Processing Temp:260°C±5°C 5S

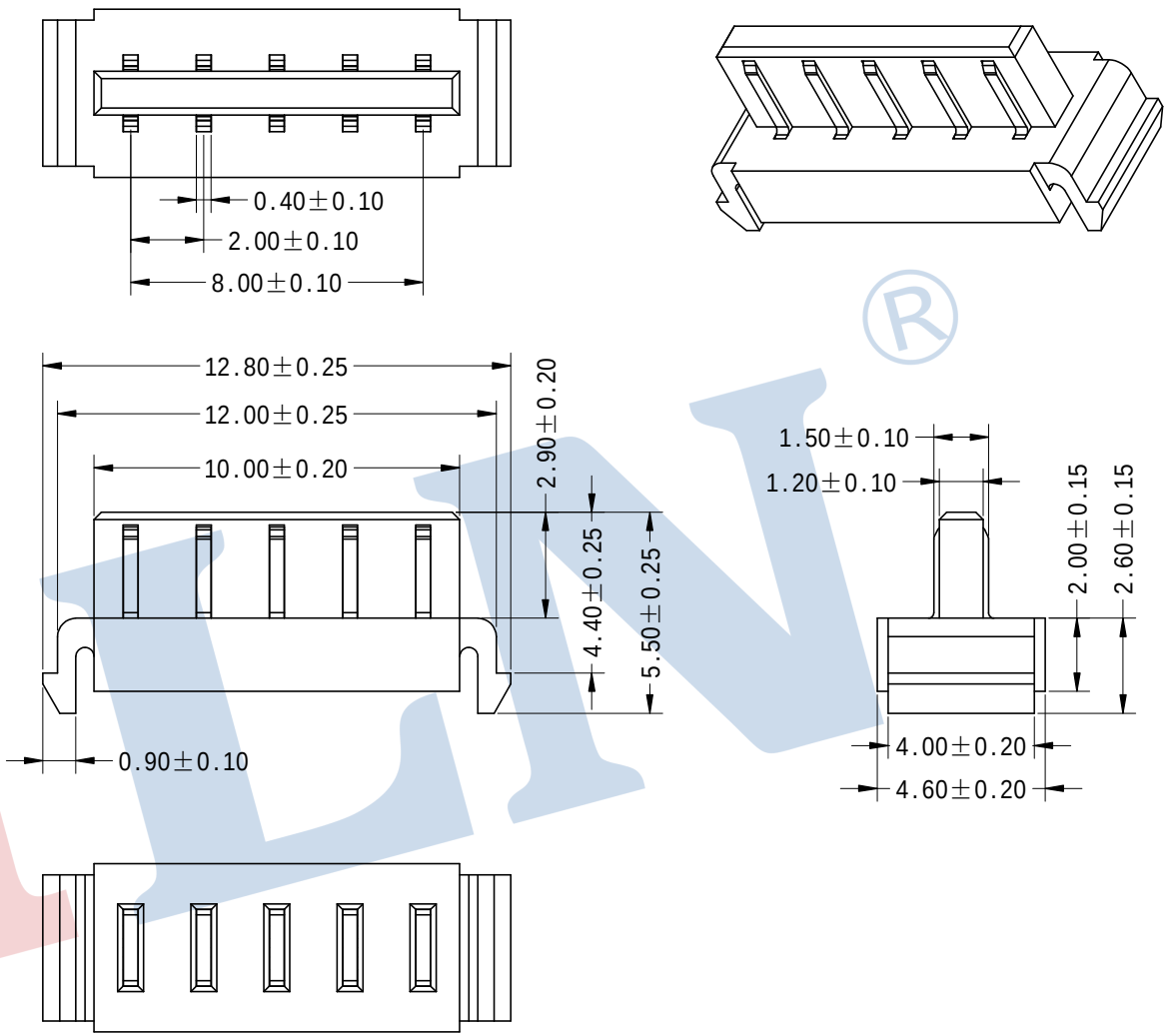

Ordering Information

3811 44 05 N S3 B X 01

- 44: Plastics Height 44=4.4mm
- 05: No.of Pins 05=5P
- S3: Contact Plating
  - G0:Gold Flash
  - G1:3U" Gold
  - G2:5U" Gold
  - G3:10U" Gold
  - G4:15U" Gold
  - S0:Gold Flash/Tin
  - S1:3U" Gold/Tin
  - S2:5U" Gold/Tin
  - S3:10U" Gold/Tin
- B: Color Type
  - B=Black
  - U=Blue
  - R=Red
  - W=White
  - Y=Yellow

REV	DATE	MODIFICATION DESCRIPTION	CHANGE
A0	2023.3.29	NEW DRAWING	

OPERATION				
X.X	±0.30	DRAW	Jelly Feng	2023.3.29
X.XX	±0.20	CHECK		
X.XXX	±0.10			
Angle	±3°	APPROVE		
DIM	TOL			

SCALE	FIT
UNIT	mm
SIZE	A4
SHEET	1/1
PROJ.	

JILN® 深圳市锦凌电子有限公司
SHENZHEN JINLING ELECTRONICS CO.,LTD
Tel: 86-755-2997-5806/5802 Fax: 86-755-2997-5992

PART NO.	3811A-4405NS3B01
TITLE:	2.0 Mini Jumper H=4.4mm 带扣